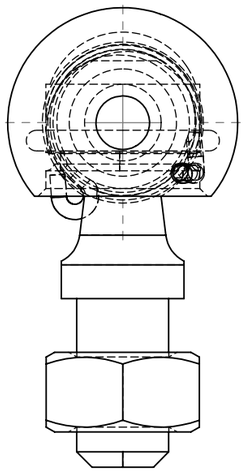

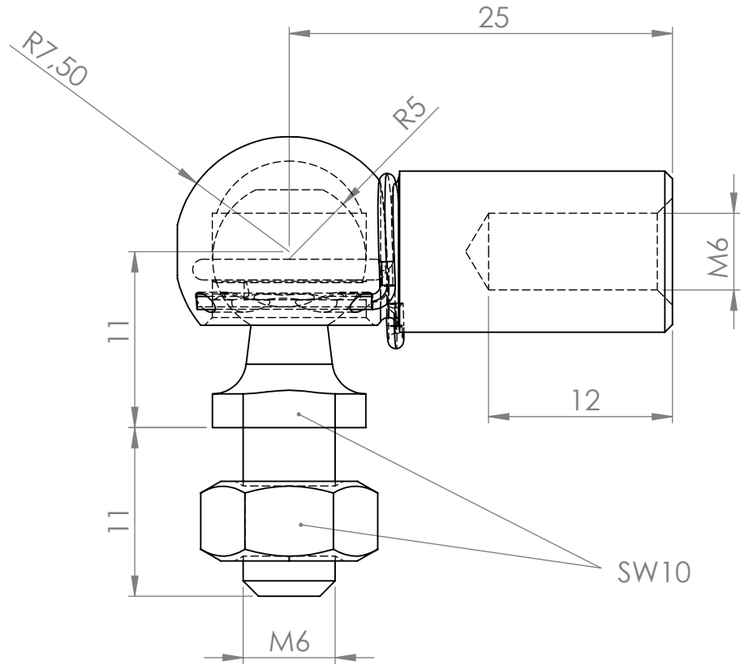

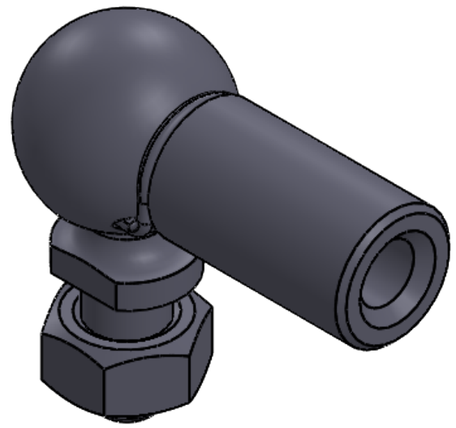

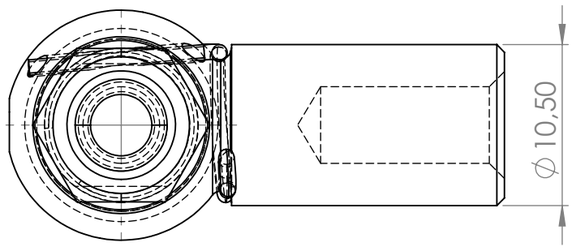

Germany: +49 (0) 322 21090223
Netherlands: +31 (0) 541 682186
Poland: +48 (0) 6 8888 1005
info@gasfedern.eu
info@springmasters.nl
info@sprezynygazowe.pl

TITLE: 13.M6L25CS10M6

DWG NO.

REVISION

A3

DO NOT SCALE DRAWING

SCALE:2:1

SHEET 1 OF 1